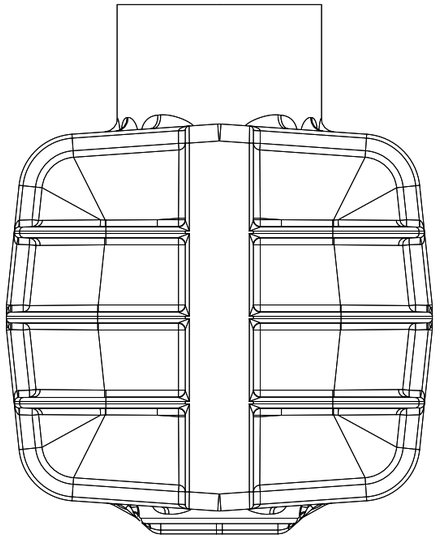

"South" View

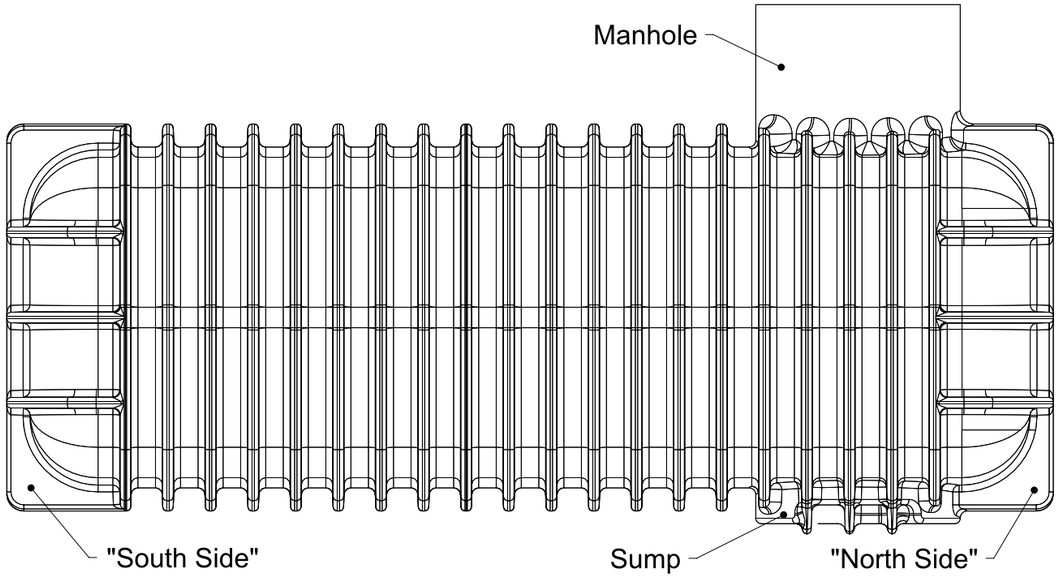


Side View

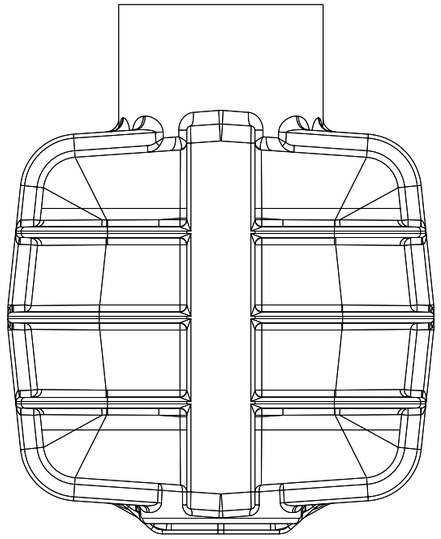

"North" View

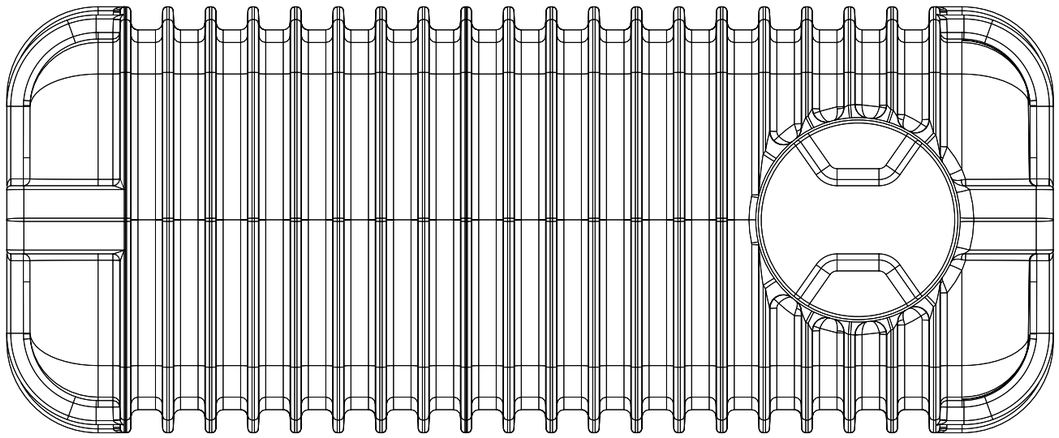

Top View

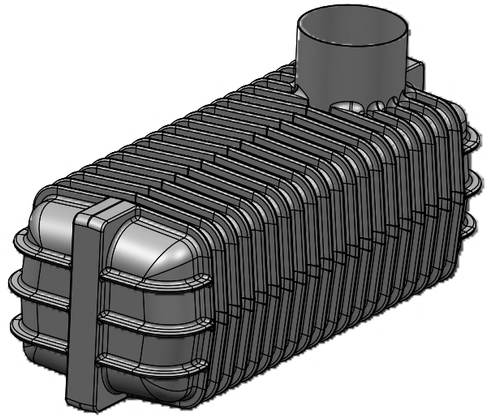

| Fitting Layout Tables | | | | |
|---|---|---|---|---|
| Noz. No | PE Size | Level Mark | Angle | Description |
| N1 | | | | |
| N2 | | | | |
| N3 | | | | |
| N4 | | | | |
| N5 | | | | |
| N6 | | | | |
| N7 | | | | |
| N8 | | | | |

Promax
LIQUID MANAGEMENT SOLUTIONS

THIS DOCUMENT (AND THE INFORMATION SHOWN THEREON) IS CONFIDENTAL AND PROPRIETARY AND SHALL NOT BE DISCLOSED TO OTHERS IN HARD COPY OR ELECTRONIC FORM, REPRODUCED BY ANY MEANS, OR USED FOR ANY PURPOSE WITHOUT WRITTER CONSENT OF PROMAX PLASTICS LIMITED.

UNLESS OTHERWISE SPECIFIEDTHE INFORMATION WITHIN THIS TITLE BLOCK SHALL APPLY

-

*DIMENSIONS ARE IN: MM*
*UNSPECIFIED DIMS IN 3D*
** DIMENSIONS FOR REFERENCE*

CAGE CODE -

MATERIAL -

FINISH -

| | | |
|---|---|---|
| DES BY | A.P. | 23 AUG 2021 |
| DRAWN BY | | |
| CHECK BY | | |
| APPR BY | J.A. | 23 AUG 2021 |

TITLE
**Underground Tank (PMXUT / PMXUS)**
**NOZZLES LAYOUT**

| SIZE | DWG NO | REV |
|---|---|---|
| A3 | - | - |

| SCALE | 1:20 | MASS | UNSP | SHEET | 1 OF 1 |
|---|---|---|---|---|---|