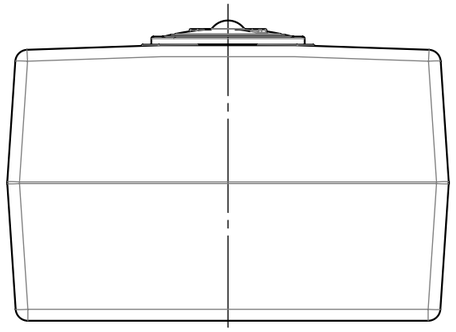

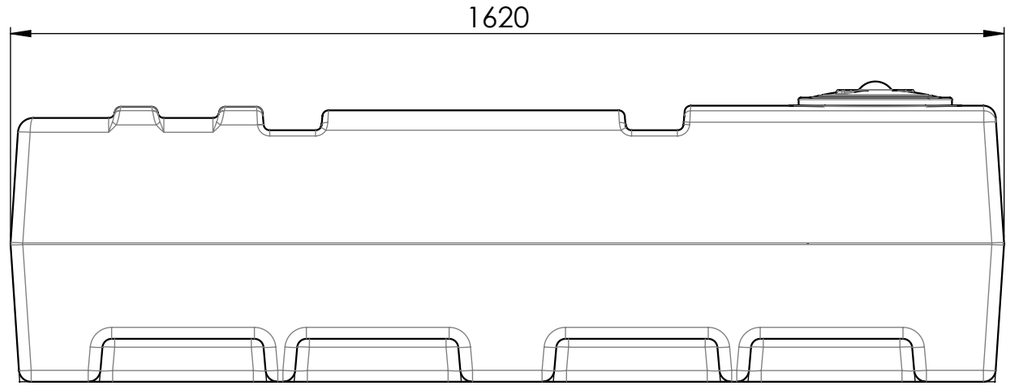

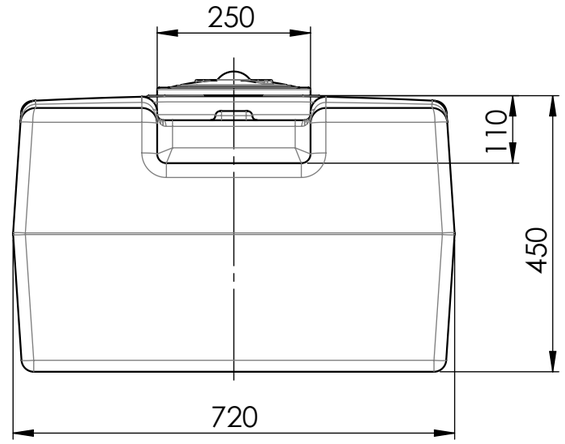

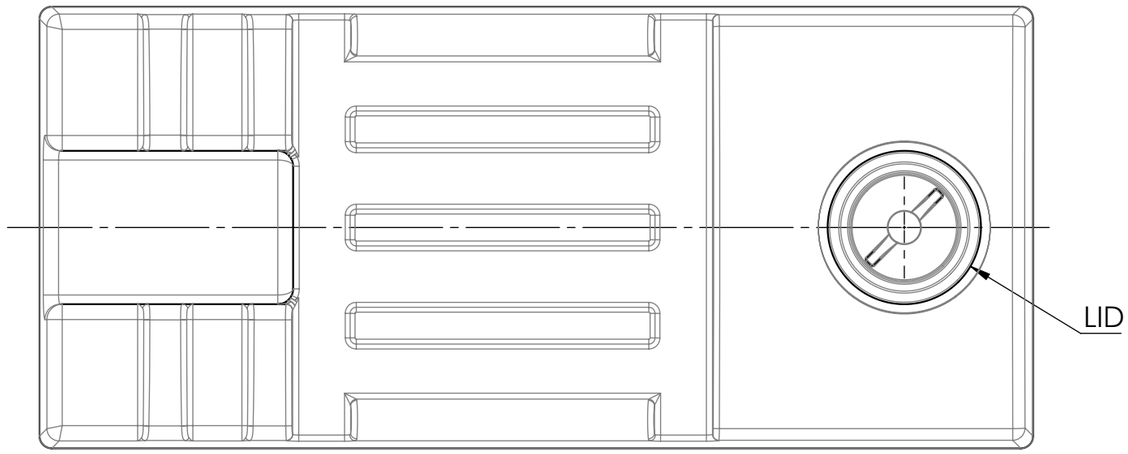

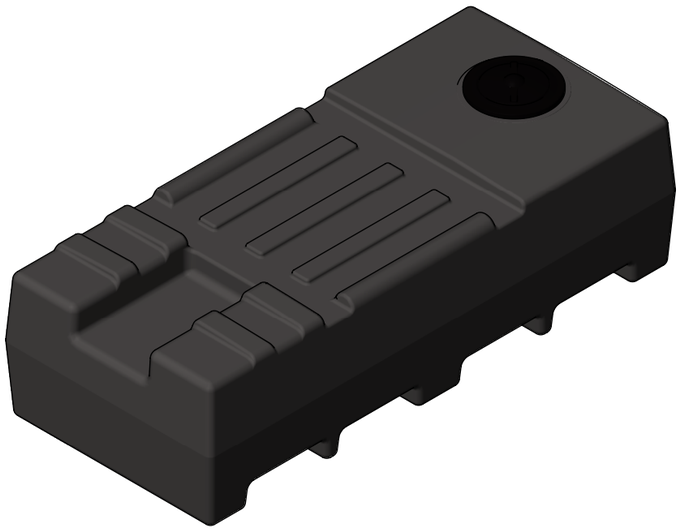

UNLESS OTHERWISE SPECIFIED: DIMENSIONS ARE IN MILLIMETERS SURFACE FINISH: TOLERANCES: LINEAR: ANGULAR:	FINISH:				DEBUR AND BREAK SHARP EDGES	DO NOT SCALE DRAWING / REVISION
	NAME	SIGNATURE	DATE			promax ENGINEERED PLASTICS
DRAWN						TITLE: 400L FREE-STANDING LOW-PROFILE TRANSPORT TANK
CHK'D						
APPV'D						
MFG						
Q.A				MATERIAL:		DWG NO. TTLP00400NA / A3
				WEIGHT:		SCALE:1:10 / SHEET 1 OF 1