Job Customer:	Title:	Ref:

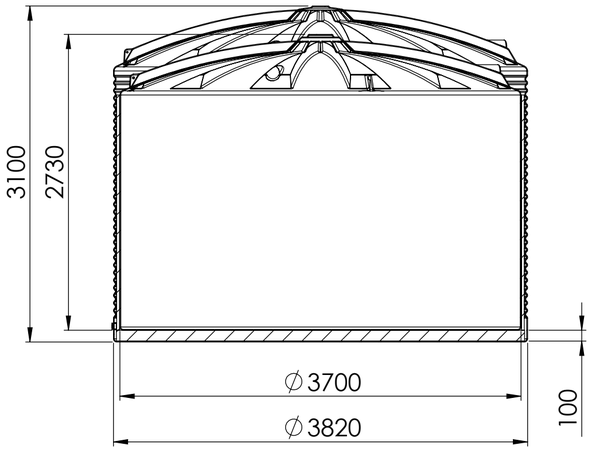

0°

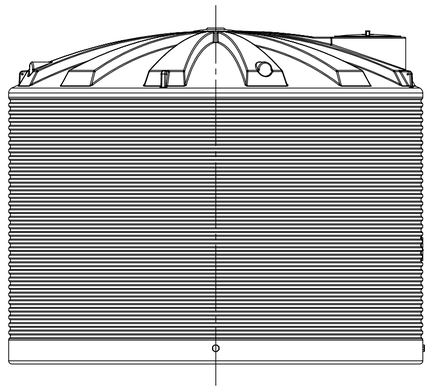

90°

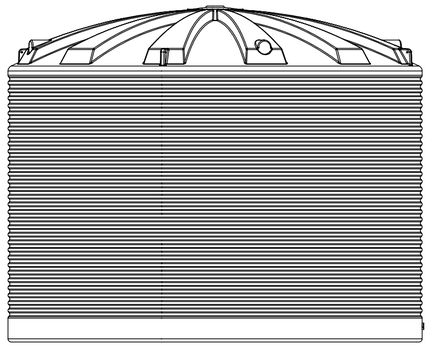

180°

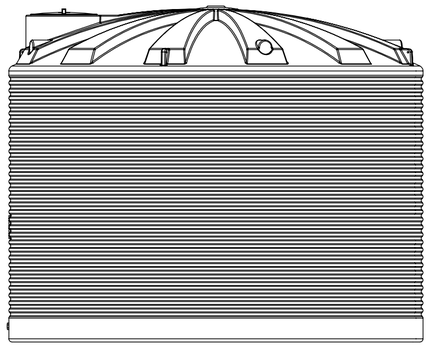

270°

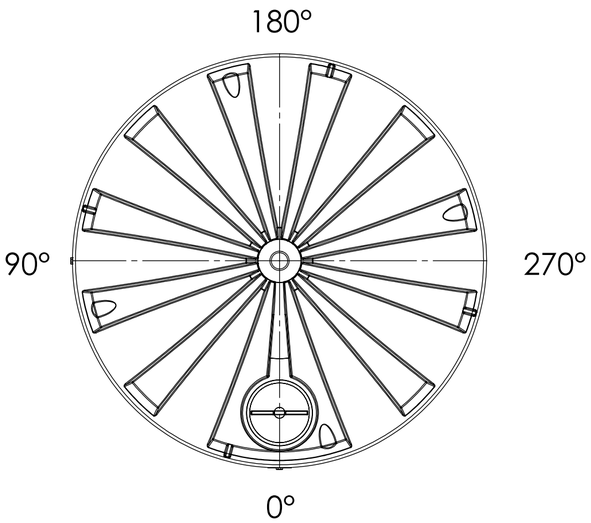

FITTING LAYOUT TABLE				PART LIST	
NOZZLE No.	DN/PE SIZE	ANGLE	DESCRIPTION	PART No.	NAME
N1					

NOTE:

1. ALL DIMENSIONS ARE IN mm
2. TOLERANCE: 3%
3. ANY CHANGES MARK UP IN RED

Disclaimer: This is a tank manufacturing drawing / layout only - flexible field connections are required and field assembly details are not included

CLIENT APPROVAL	SIGNATURE
☐ APPROVED ☐ REVISE AND RESUBMIT ☐ FOR INFORMATION ONLY	
DATE:	

Promax
LIQUID MANAGEMENT SOLUTIONS

DO NOT SCALE DRAWING

ORIGINAL ISSUE: 29/10/2025

PROPRIETARY AND CONFIDENTIAL
THIS DRAWING AND THE INFORMATION AND TECHNICAL DATA CONTAINED HEREIN ARE THE EXCLUSIVE PROPERTY OF PROMAX PLASTICS AND SHALL BE RETURNED TO THEM UPON REQUEST.
THIS DRAWING CONTAINS PROPRIETARY AND CONFIDENTIAL INFORMATION FOR THIS PROJECT AND IS NOT TO BE MADE AVAILABLE TO 3RD PARTIES WITHOUT THE EXPRESS WRITTEN CONSENT OF PROMAX PLASTICS.

OPP:		DISPLAY NAME/NUMBER: Promax Insulated 25,000 Ltr R2 Light Grey BDR425000	
AUTHOR:	D.S		
MATERIAL:	LLDPE	DWG NO.	A2
WEIGHT:		SCALE:1:40	SHEET 1 OF 2