Job Customer:

Title:

Ref:

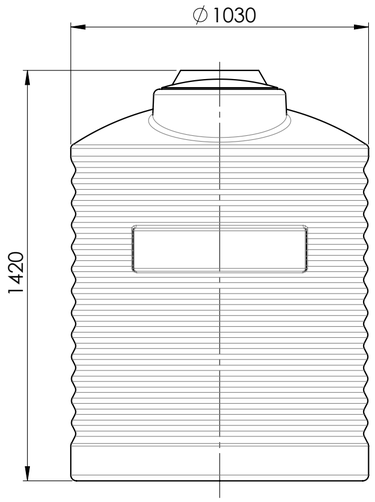


0°

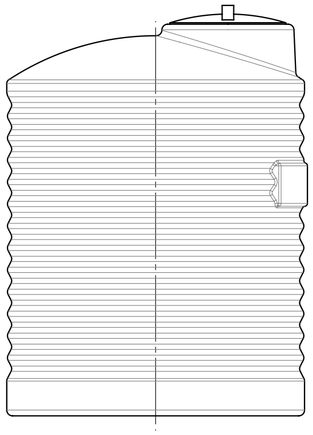

90°

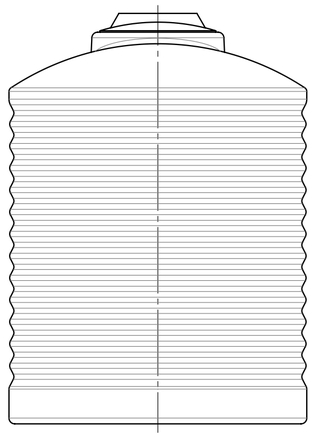

180°

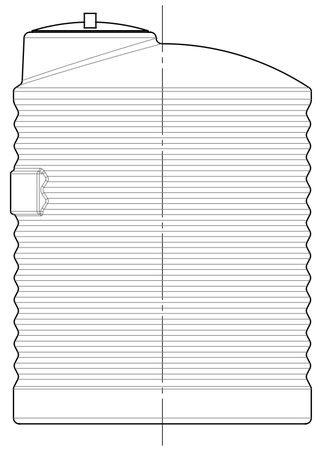

270°

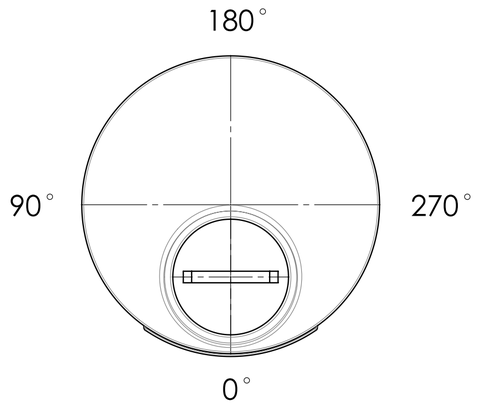

| FITTINGS LAYOUT TABLE | | | | |
|---|---|---|---|---|
| NOZZLE No | PE SIZE | LEVEL MARK | ANGLE | DESCRIPTION |
| N1 | | | | |
| N2 | | | | |
| N3 | | | | |
| N4 | | | | |
| N5 | | | | |
| N6 | | | | |
| N7 | | | | |
| N8 | | | | |

NOTES:

1. LEVEL MARKS ARE IN m, DIMENSIONS ARE IN mm.

| DATE | CLIENT APPROVAL SIGNATURE |
|---|---|
| | |

UNLESS OTHERWISE SPECIFIED:
DIMENSIONS ARE IN MILLIMETERS
SURFACE FINISH:
TOLERANCES:
LINEAR:
ANGULAR:

FINISH:

DEBURR AND BREAK SHARP EDGES

| | NAME | SIGNATURE | DATE |
|---|---|---|---|
| DRAWN | | | |
| CHK'D | | | |
| APPV'D | | | |
| MFG | | | |
| Q.A | | | |

MATERIAL:

WEIGHT:

DO NOT SCALE DRAWING

REVISION

promax ENGINEERED PLASTICS

TITLE:
1000 LTR WATER TANK
(EN1001000)
NOZZLES LAYOUT

DWG NO.

A2

SCALE:1:15

SHEET 1 OF 1