Job Customer:

Title:

Ref:

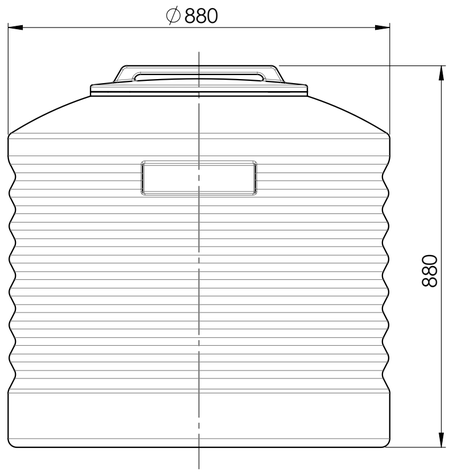

0°

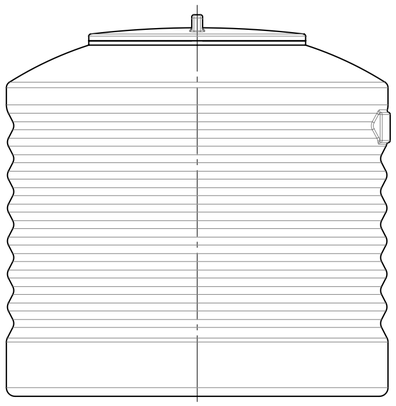

90°

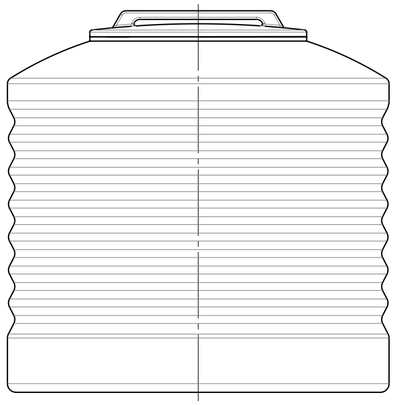

180°

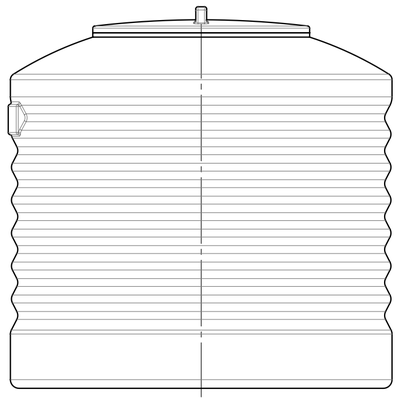

270°

180°

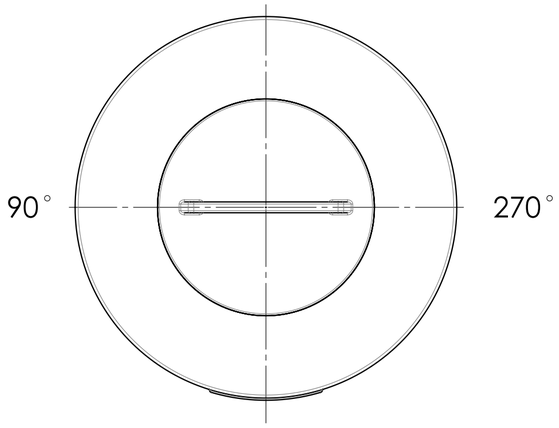

0°

FITTINGS LAYOUT TABLE				
NOZZLE No	PE SIZE	LEVEL MARK	ANGLE	DESCRIPTION
N1				
N2				
N3				
N4				
N5				

NOTES:

1. LEVEL MARKS ARE IN m, DIMENSIONS ARE IN mm.

DATE	CLIENT APPROVAL SIGNATURE

UNLESS OTHERWISE SPECIFIED:
DIMENSIONS ARE IN MILLIMETERS
SURFACE FINISH:
TOLERANCES:
LINEAR:
ANGULAR:

FINISH:

DEBURR AND BREAK SHARP EDGES

DO NOT SCALE DRAWING

REVISION

promax ENGINEERED PLASTICS

	NAME	SIGNATURE	DATE
DRAWN			
CHK'D			
APPV'D			
MFG			
Q.A			

MATERIAL:

WEIGHT:

TITLE:
450 LTR WATER TANK (EN1000450)
NOZZLES LAYOUT

DWG NO.

A2

SCALE:1:10

SHEET 1 OF 1